WWW.HECOGEAR.COM

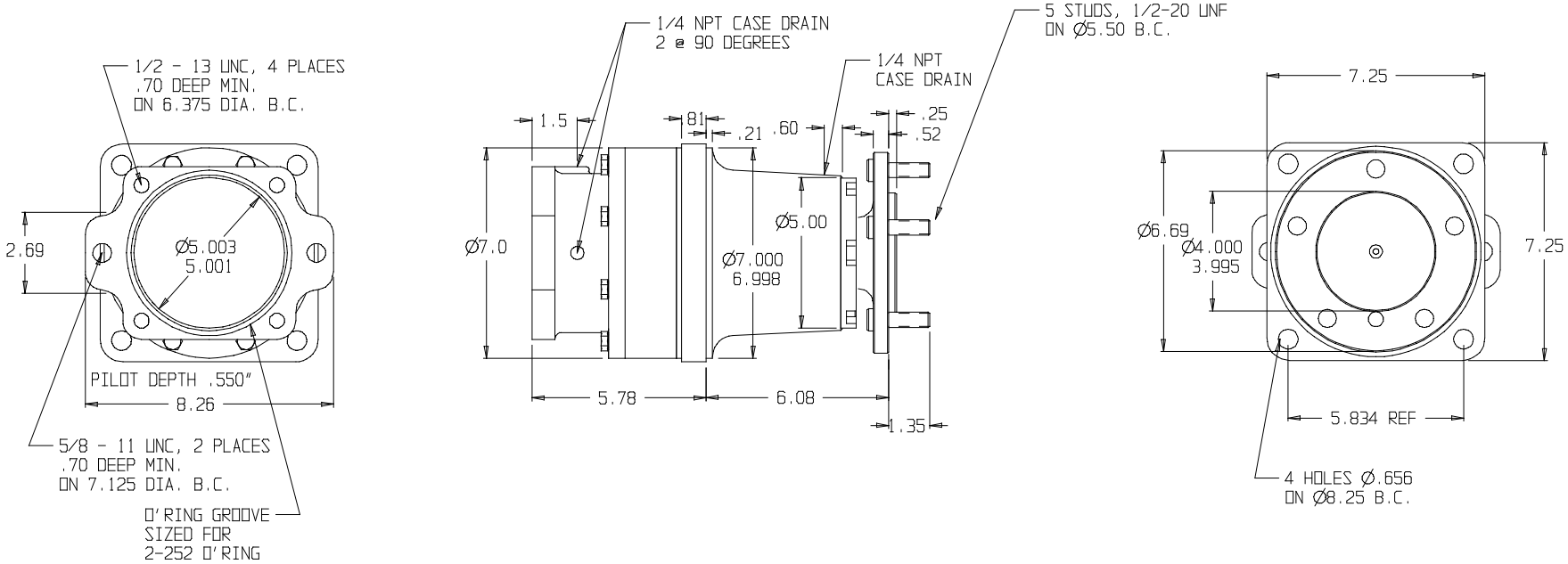

SUN GEARS- SUGGESTED MOTOR SHAFT LENGTHS			
SUN GEAR	SHAFT TYPE	MIN. (IN.)	MAX. (IN.)
16B	7/8" 13T SPLINE	1.40	1.75
16C	1" 15T SPLINE	1.70	1.95
16D	1" ST. KEYED	1.80	2.10
16E	C/L 2000 BEARINGLESS	N/A	N/A
16F	C/L 4000 BEARINGLESS	N/A	N/A
16H	1 1/4" ST. KEYED	2.05	2.40
16I	1 1/4" 14T SPLINE	2.00	2.32
16M	1" SAE 6B SPLINE	1.95	2.30

©COPYRIGHT 2004, HECO GEAR, INC.

REV	DESCRIPTION	DATE	APPROVED
-	---	--	--
-	---	--	--
-	---	--	--

REVISIONS

THIS DRAWING CONTAINS PROPRIETARY AND CONFIDENTIAL INFORMATION OF HECO GEAR, INC. IN ACCEPTING THIS DRAWING, (CUSTOMER) ACKNOWLEDGES THE VALUE OF THE INTELLECTUAL PROPERTY CONTAINED HEREIN AND AGREES THAT THE INFORMATION IN THIS DRAWING IS THE PROPERTY OF AND PROPRIETARY TO HECO GEAR, INC. AND MAY NOT BE REPRODUCED WITHOUT THE EXPRESS WRITTEN PERMISSION OF HECO GEAR, INC. ALL RIGHTS RESERVED.

HECO GEAR
2250 DEL MONTE STREET
WEST SACRAMENTO, CA 95691
(916)-372-5411 FAX (916)-373-0052

TITLE
MODEL 16 ASSEMBLY

DESCRIPTION
HECO 16 MODEL CODE:
16CF5 65

SIZE	DRAWN BY:	DWG NO.	REV
D	KSC	-----	-

SCALE: DO NOT SCALE | DATE: 04/19/01 | SHEET 1 OF 1