WWW.HECOGEAR.COM

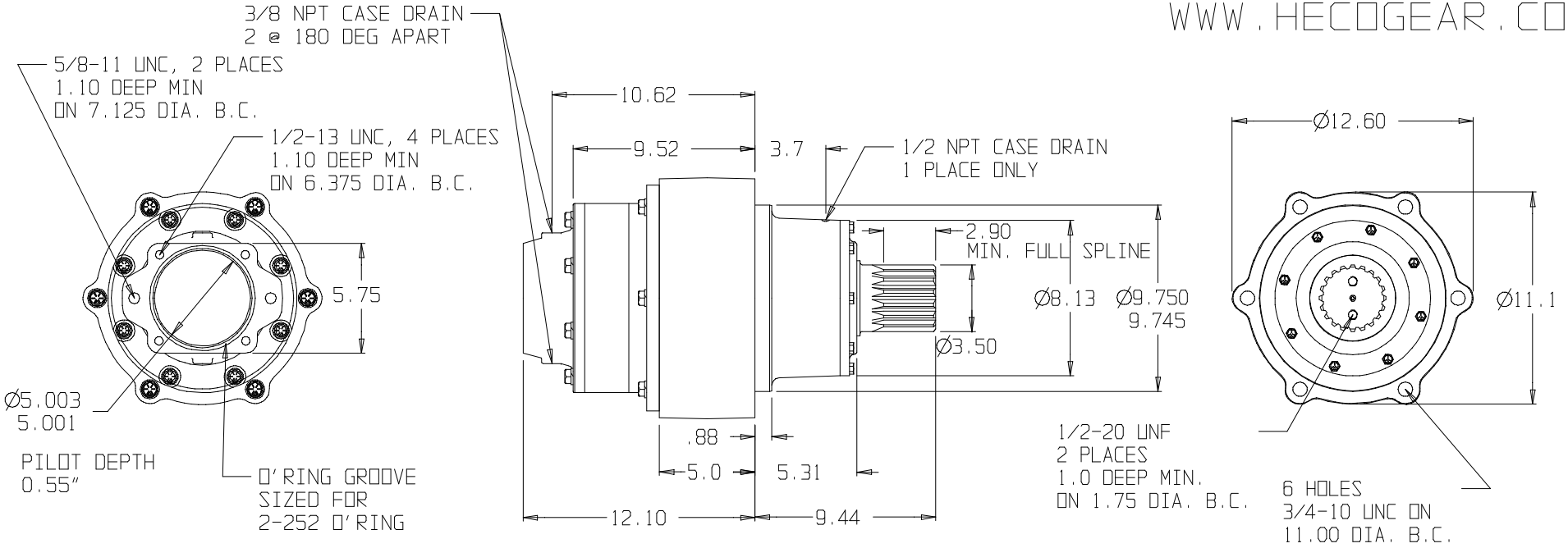

Spline Data		
NO. TEETH	20	
PITCH	6/12	
PITCH DIA.	3.3333	⊙ A .002
PRESSURE ANGLE	30°	
TOOTH THKNS MAX. EFF.	.2602 (6.609)	
MAX. ACT.	.2583 (6.561)	
MIN. ACT.	.2569 (6.525)	
PIN DIA.	.3200 (8.1280)	
MEAS. OVER 2 PINS, MAX.	3.8222 (97.084)	
MIN.	3.8201 (97.031)	
TIF DIA. MAX.	3.1600 (80.264)	
MINOR DIA. MAX.	3.1293 (79.484)	
MIN.	3.1073 (78.925)	
TYPE OF FIT	FLAT ROOT SIDE FIT	

SUN GEARS- SUGGESTED MOTOR SHAFT LENGTHS			
SUN GEAR	SHAFT TYPE	MIN. (IN.)	MAX. (IN.)
20F	C/L 4000 BEARINGLESS	N/A	N/A
20G	C/L 6000 BEARINGLESS	N/A	N/A
20I	1 1/4" 14T SPLINE	1.97	2.32
–	–	–	–

* RATIO DOES NOT CHANGE DIMENSIONS

THIS DRAWING CONTAINS PROPRIETARY AND CONFIDENTIAL INFORMATION OF HECO GEAR, INC. IN ACCEPTING THIS DRAWING, (CUSTOMER) ACKNOWLEDGES THE VALUE OF THE INTELLECTUAL PROPERTY CONTAINED HEREIN AND AGREES THAT THE INFORMATION IN THIS DRAWING IS THE PROPERTY OF AND PROPRIETARY TO HECO GEAR, INC. AND MAY NOT BE REPRODUCED WITHOUT THE EXPRESS WRITTEN PERMISSION OF HECO GEAR, INC. ALL RIGHTS RESERVED.

©COPYRIGHT 2002, HECO GEAR, INC.

REV	DESCRIPTION	DATE	APPROVED
-	---	--	--
-	---	--	--
-	---	--	--
-	---	--	--
-	---	--	--

REVISIONS

HECO GEAR
2350 DEL MONTE STREET
WEST SACRAMENTO, CA 95691
(916)-372-5411 FAX (916)-373-0952

TITLE
MODEL 52D ASSEMBLY

DESCRIPTION
HECO MODEL 52D CODE:
52DCF4 6 36*

SIZE	DRAWN BY:	DWG NO.	REV
D	KSC	----	-

SCALE: DO NOT SCALE | DATE: 02/06/02 | SHEET 1 OF 1