HECO GEAR

25DCF11 Marketing Sheet

www.hecogear.com 916.372.5411

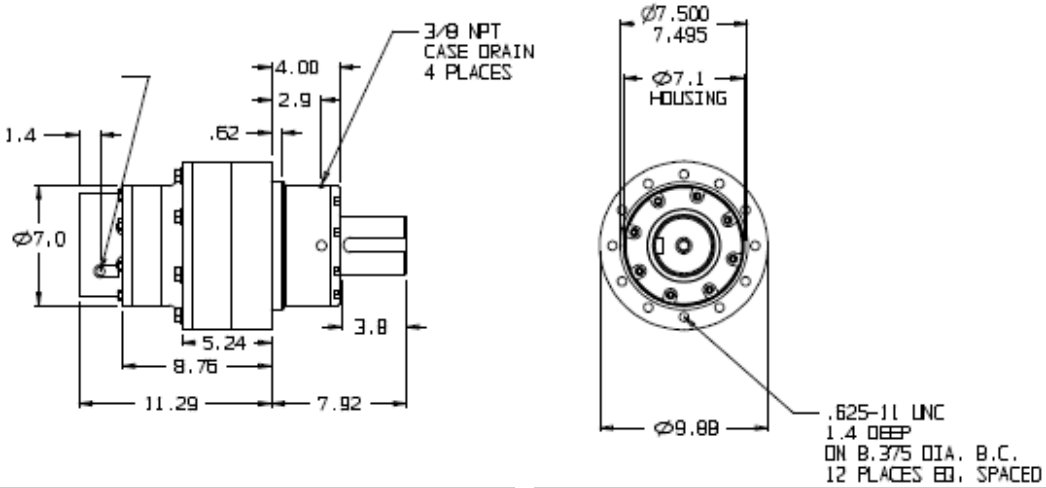

Flange and Shaft

Code	Description
25DCF	Model 25 Double Reduction Center Flange Mount
11	3.375" Straight Keyed Shaft Shaft

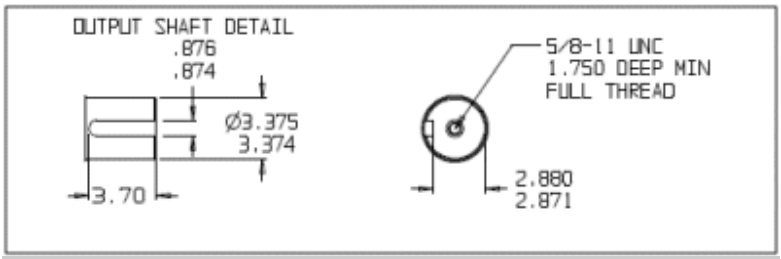

Motor Adapter Options

Code	Description
4	SAE A 3.25" Pilot 2&4 Bolt
0	SAE B 4.00" Pilot 4 Bolt
5	SAE B 4.00" Pilot 2 Bolt
6	SAE C 5.00" Pilot 2&4 Bolt

Ratio Options

Code	Description
25	24.9 : 1 Double Reduction
31	31.2 : 1 Double Reduction

Order Information and Model Code

25DCF	11	-			-		-	
Flange	Shaft	-	Motor Adapter	Ratio	-	Design Code	-	Special Options

Sungear (Input Motor Shaft) Options

Code	Description
16-4000-H	1-1/4" Straight Keyed for Charlynn Standard 4000 Motor
16-4000-I	1-1/4" 14T Spline 12/24 DP for Charlynn Standard 4000 Motor
16B	7/8" 13T Spline 16/32 DP (1.40" to 1.75" shaft length)
16D	1" Straight Keyed (1.80" to 2.10" shaft length)
16H	1-1/4" Straight Keyed (2.05" to 2.40" shaft length)
16I	1-1/4" 14T Spline 12/24 DP (2.00" to 2.32" shaft length)
16M	1" SAE 6B Spline (1.95" to 2.30" shaft length)
16P	1-1/8" Keyed (1.85" to 2.15" shaft length)
16C	1" 15T Spline 16/32 DP (1.70" to 1.95" shaft length)
16E	Charlynn 2000 Bearingless
16O	7/8" Keyed (1.80" to 2.09" shaft length)
16F	Charlynn 4000 Bearingless
16S	Danfoss OMSS

Performance Data

Torque	in-lbs	ft-lbs	Nm
Continuous	85,000 in-lbs	7,080 ft-lbs	9,605 Nm
Intermittent	110,000 in-lbs	9,165 ft-lbs	12,425 Nm
Peak	135,000 in-lbs	11,250 ft-lbs	15,225 Nm
Radial Load			30,000 lbs
Approximate Weight			155 lbs

	Ratio	Output rpm	Input rpm
Maximum Speed	31.2	75	2300

* Maximum life in high torque applications will be achieved at lower output speeds. Conversely, maximum life in high speed applications will be achieved at lower output torques.
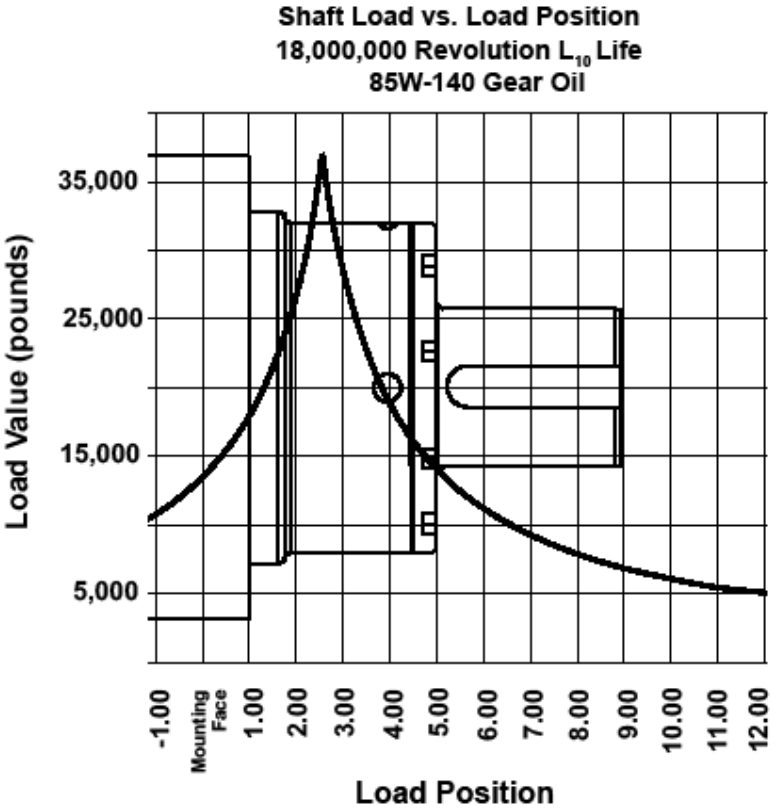
Radial Load Chart